LONG SEAMS	
COURSE	ORIENTATION
1 (TOP)	0°
2	348°

*VERT – TOP TO BOTTOM

Ship loose items:
NONE

NOTE 7: X-RAY: SPOT RADIOGRAPHY REQUIRED FOR NOZZLE B PER API 650.

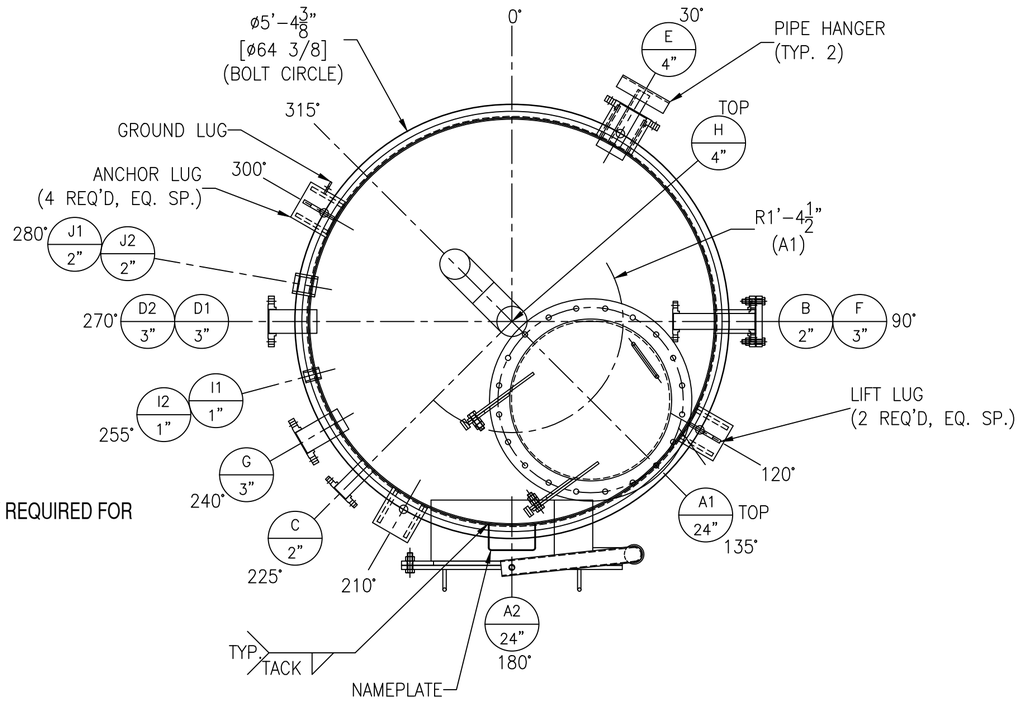

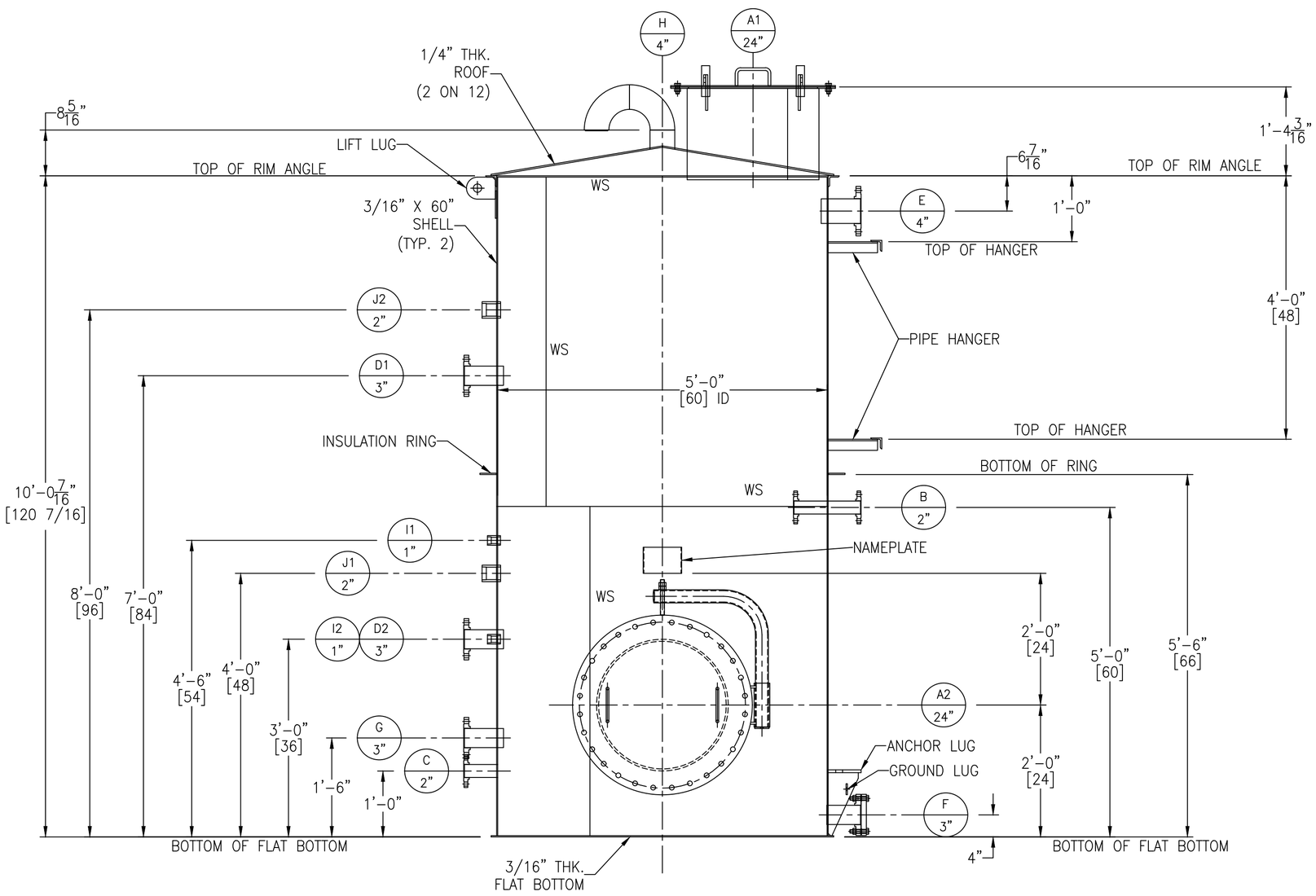

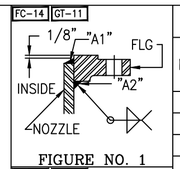

FIGURE NO. 1

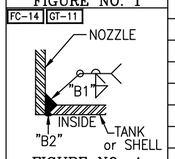

FIGURE NO. 4

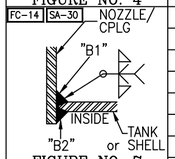

FIGURE NO. 7

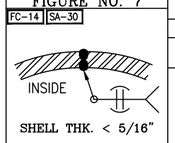

FIGURE NO. 9

NOZZLE SCHEDULE

MARK	SERVICE	SIZE	RATING	TYPE / STYLE	NECK SCHED.	PROJECTION EXT. (℄)	PROJECTION INT. (MIN.)	WELD FIGURE	REPAD SIZE (WIDTH X THK.)	WELD SIZE "A1"	"A2"	"B1"	"B2"	"C1"	"C2"
A1	ROOF MANWAY	24"	–	API W/ HINGE	1/4"	SEE DWG	1"	7	–	–	–	3/16	1/8	–	–
A2	SHELL MANWAY	24"	–	API W/ DAVIT	1/4"	6"	1"	7	–	–	–	3/16	1/8	–	–
B	INFLUENT	2"	150"	RFSO (X2)	80S	6"	SEE DWG	1,7	–	3/16	3/16	1/4	1/4	–	–
C	EFFLUENT TO AIR PUMP/DRAIN	2"	150"	RFSO	80S	6"	–	1,4	–	3/16	3/16	1/4	1/8	–	–
D1	HEAT ELEMENT	3"	150"	RFSO	40S	6"	1"	1,7	–	3/16	3/16	1/4	1/4	–	–
D2	HEAT ELEMENT	3"	150"	RFSO	40S	6"	1"	1,7	–	3/16	3/16	1/4	1/4	–	–
E	OVERFLOW	4"	150"	RFSO	40S	6"	1"	1,7	–	1/4	1/4	1/4	1/4	–	–
F	DRAIN/SPARE	3"	150"	RFSO W/ BLIND	40S	6"	–	1,4	–	3/16	3/16	1/4	1/8	–	–
G	LEVEL TRANSMITTER	3"	150"	RFSO	40S	6"	1"	1,7	–	3/16	3/16	1/4	1/4	–	–
H	VENT LINE	4"	–	PIPE W/ ELBOWS	40S	SEE DWG	–	4	–	–	–	3/16	1/8	–	–
I1	–	1"	3000"	FULL THRD CPLG	–	–	1/2"	7	–	–	–	1/4	1/8	–	–
I2	–	1"	3000"	FULL THRD CPLG	–	–	1/2"	7	–	–	–	1/4	1/8	–	–
J1	–	2"	3000"	FULL THRD CPLG	–	–	1/2"	7	–	–	–	1/4	1/8	–	–
J2	–	2"	3000"	FULL THRD CPLG	–	–	1/2"	7	–	–	–	1/4	1/8	–	–

GENERAL NOTES

1.) COVER ALL FLANGES, OPENINGS & MACHINED SURFACES PRIOR TO SHIPMENT UNLESS OTHERWISE NOTED.
2.) BOLT HOLES TO STRADDLE 0° & 180° UNLESS OTHERWISE NOTED.
3.) NOZZLE REPADS TO HAVE (1) ø1/4" NPT TELL–TALE HOLES ON HORIZONTAL CENTER LINE. ALL OTHER REPADS TO HAVE (1) ø1/4" WEEP HOLE AT LOWEST POINT ON PAD.
4.) MANUFACTURING TOLERANCE TO BE IN ACCORDANCE WITH API STANDARD 650 7.5.
5.) ASME MATERIALS TO CONFORM TO THE FOLLOWING: FLANGES – B16.5, FITTINGS – B16.9 & COUPLINGS – B16.11.
6.) PICKLE ALL EXTERIOR WELDS. PASSIVATE INTERIOR & EXTERIOR OF VESSEL.
7.) X–RAY: SPOT RADIOGRAPHY REQUIRED FOR NOZZLE B PER API 650.

QUALITY CONTROL

ENG. _____ DATE: _____

Q.C. _____ DATE: _____

This drawing is issued for customer approval. please review, make approval changes (if any) in red. check the appropriate box, sign & date.

- ☐ Approval – no changes. Please proceed with fabrication.
- ☐ Approved as noted. Please proceed with fabrication
- ☐ Not approved. Please make changes and resubmit.

Customer signature _____ Date _____

MATERIALS OF CONSTRUCTION

	VESSEL
SHELL	SA240–304/304L
CONE/ FLAT BOTTOM	SA240–304/304L
RIM ANGLE	SA479–304/304L
NOZZLE NECKS	SA312–304/304L WLD & SA403–304/304L WPB
NOZZLE FLANGES	SA182F–304/304L
MANWAY NECKS	SA240–304/304L
MANWAY FLANGES	SA240–304/304L
GASKETS	GARLOCK 3000
BOLTS/STUDS	SA193–B7 (ZINC PLATED)
NUTS	SA194–2H (ZINC PLATED)
REPADS	SA240–304/304L
COUPLINGS	SA182F–304/304L
SUPPORTS/HOLD DOWNS	SA240–304/304L
LIFTING LUGS	SA240–304/304L
PIPE HANGER	SA479–304/304L
INSULATION RINGS	SA240–304/304L
GROUND LUG	SA240–304/304L
BAFFLE	–
LADDER	–

DESIGN DATA

	VESSEL
DESIGN AND FAB. CODE	API650
CERT. STAMP REQ'D.	NO
DESIGN PRESSURE	ATM
DESIGN TEMPERATURE	150° F
MIN. DESIGN METAL TEMP.	–20° F @ ATM
OPERATING PRESSURE	–
OPERATING TEMPERATURE	–
JOINT EFFICIENCY HEADS	0.70
JOINT EFFICIENCY SHELL	0.70
CORROSION ALLOWANCE	0"
SPECIFIC GRAVITY	1.0
EARTHQUAKE ZONE	Ss = (0.298) S1 = (0.110)
WIND LOAD	127 MPH
STRESS RELIEF	NOT REQ'D
RADIOGRAPHIC EXAM	SPOT (SEE NOTE 7)
DYE PENETRANT EXAM	NOT REQ'D
MAGNETIC PARTICLE EXAM	NOT REQ'D
HYDROSTATIC TEST	–
PNEUMATIC TEST	2 PSIG / GAUGE #1

VESSEL FINISH

INTERIOR WELD TREATMENT:	SAV TANK STANDARD
EXTERIOR WELD TREATMENT:	SAV TANK STANDARD
SAV TANK FINISHING STANDARD:	SEE NOTE 6
INSULATION:	3" BY OTHERS
PAINTING:	N/A

VESSEL CAPACITY AND WEIGHTS

OPERATING CAPACITY	–
FULL CAPACITY	1,490 GAL.
EMPTY SHIPPING WEIGHT	2,600 LBS.
WEIGHT FULL OF WATER	13,000 LBS.
WEIGHT FULL OF PRODUCT	13,000 LBS.

REVISIONS

REV	D.BY	C.BY	DATE	DESCRIPTION
				AS BUILT
2	RS	–	9/16/24	CERTIFIED
1	RS	AD	9/13/24	APPROVAL REV 1
0	RS	AD	8/27/24	APPROVAL

Savannah Tank & Equipment Corp.
1517 Telfair Road, Savannah, GA 31415
(912) 233–8902

DRAWN BY: RS
CHK'D BY: AD
APPROVED BY: NP
SCALE: 3/4" = 1'–0"

PISTOL'S INDUSTRIAL SERVICE INC.
SS304 STORAGE TANK
EQUIP. #
CUST. PO # 701890

DRAWING NO.: 045–24–1 SHT 1 OF 4 REV. SET 2